GERBER

www.gerberonline.com

MAXWELL®
1.28 GPF (4.8 LPF)
Ergoheight™ Elongated Toilet

Features:

GWS20918

Included Components:

- ☐ Combination GWS20918
  - ☐ Bowl GMX21928
  - ☐ Tank G0028990

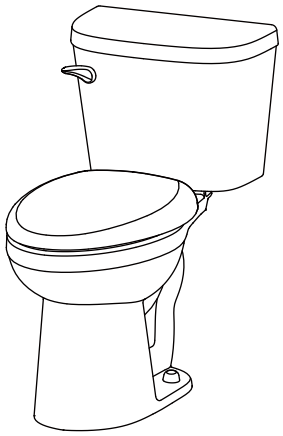

- Vitreous China
- 12″ Rough-in
- 3″ flush valve for maximum water force
- Fluidmaster 300A Fill Valve
- Corrosion resistant flapper
- Extra-Large Dual fed siphons jets for high power bowl
- 100% glazed, 2″ trapway
- Double nut, multi-point tank-to-bowl mounting system for tool-free installation
- White/Biscuit/Bone plastic lever
- Toilet seat is not included

Technical Information:

Configuration	Two Piece, Ergoheight™ Elongated Toilet
Water per Flush	1.28 GPF (4.8 LPF)
Rough-In	12″
Height	30 1/16″
Width	17 5/16″
Depth	28 3/4″
Trapway	2″
Large Water Surface	8 11/16″ x 6 5/16″
Shipping weight Bowl	51.9 lbs
Shipping weight Tank	30.4 lbs

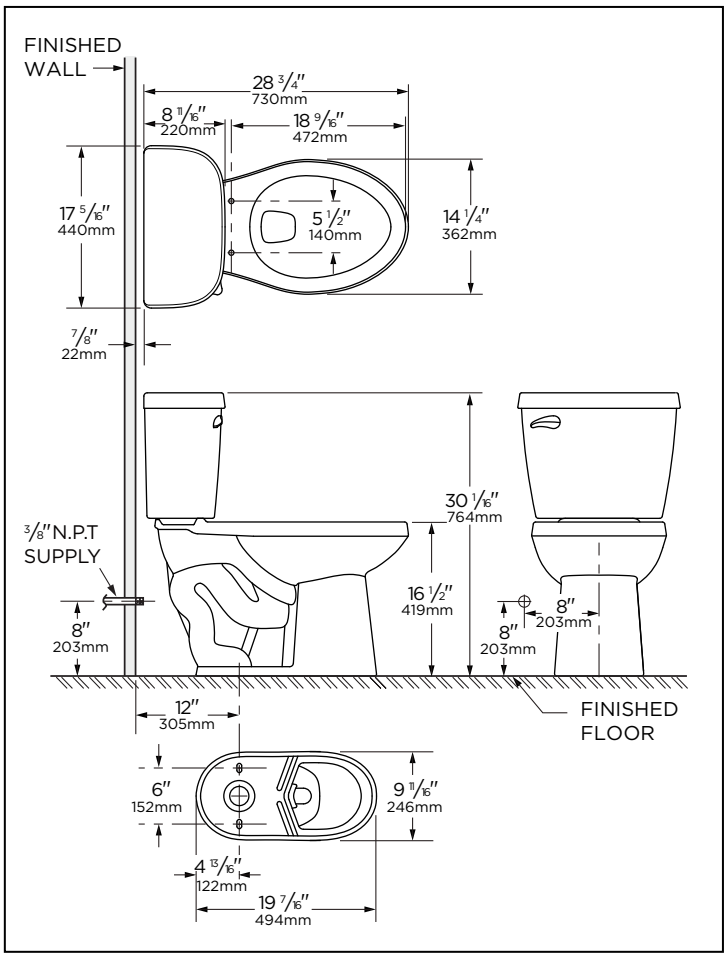

Accessories: (To be purchased separately)

N/A

Other Tank Options: (To be purchased separately)

- Insulated Tank G0028992
- Tank with Right Hand Lever G002899097

Available Colors:

- White/Biscuit/Bone
- Other: Refer to Price Book for additional colors/finishes

Warranty:

- Limited Lifetime on Vitreous China, refer to the website for more details.

HIGH EFFICIENCY TOILET HET

NOTES: All dimensions are in inches and milimeters. Illustrations may not be drawn to scale.

IMPORTANT:
Dimensions of fixtures are nominal and may vary within the range of tolerances established by ASME standard A 112.19.2
THIS FIXTURE QUALIFIES ACCORDING TO ASME TEST PROCEDURES AS A HIGH EFFICIENCY WATER CLOSET WITH AN AVERAGE CONSUMPTION OF 1.28 GPF (4.8 LPF) OR LESS.